Smart Solutions. Powerful Products.

FXRUM™
ENERGY TECHNOLOGIES

Accuseal® Power Generation Valves // 2017

FORUM™
ENERGY TECHNOLOGIES

EXPERIENCE, DEDICATION AND VISION

Introducing Forum Energy Technologies – a global provider of manufactured technologies and applied products and services. We may be a new name to you but our equipment and employees have a long history of solving our customers' challenges. FET brings together some of the most well-known brands in our industry with an extensive range of mission critical products and services. We are building a world class company to bring innovative solutions to our worldwide customers. With offices in the key energy centers of the globe, Forum is well-positioned to supply our clients with the equipment and related services that improve safety and performance and lower operating costs.

Forum's products and services range from the underground reservoir to the refinery, from the sea floor to the above ground transportation line, , to Power plants, mines, and heavy industry. We pride ourselves on giving you a comprehensive offering of solutions to maximize your operations and improve your bottom line. Our customers are our partners and we work with them to solve their ever-changing challenges.







Power Generation

FORUM provides a broad range of chokes/control valves, to meet most applications from basic manual operated to fully automated systems. As the industry continues to increase technology demands, operators select FORUM to obtain best-in-class service, performance and value. We are ISO-9001 certified, thus assuring design and manufacturing of the highest quality products available in the market.

Why Accuseal® MSBVs?

Why make Accuseal® your severe service metal-seated ball valve of choice?

Demands on power generation plants are unprecedented. In combined cycle plants nearly every unit is required to perform as a flexible generating plant, swinging load in response to fluctuations in energy demand. As coal fired plants age, thy experience more frequent outages and more starts. Mechanical equipment, including valves, must meet the ever increasing challenges relating to cycling and thermal transience. Reliable, repeatable isolation has never been more critical.

There is a difference!

Many claim to be the best. All have a ball, seat and stem. But which valve most consistently provides tight shutoff under the most challenging of conditions? You choose severe service valves with care because the consequences of failure are severe. Accuseal® Valves provides many advantages in power generation applications.

Accuseal® Valves deliver predictable reliability and performance

- Optimized Ball Valve Design and Engineering Software
  Proprietary software fast tracks optimal valve engineering.
- Superior Valve Coatings
- Accuseal®'s state-of-the-art HP-HVOF (high pressure – high velocity oxygen fuel) coatings provide maximum protection for longer valve life.
- Exclusive Accuseal Fused and thermally stabilized coatings are metallurgically bonded to the base material, to handle even the most severe thermal stresses.
- Omni-Lap 360° ™
  The proprietary Accuseal® mate-lapping process laps the entire spherical surface of the ball and seat surface, not just the sealing band areas.
- Vacuum Seal Test
  Accuseal® ball and seat sealing is tested prior to valve assembly, ensuring seal integrity.

Optimized ball valve design and engineering software

Extensive severe service ball valve engineering experience is combined with proprietary valve optimization CAD/CAM/CAE software and fast-tracks optimized valve design. Service conditions are simulated, providing feedback with engineering analysis, FEA (Finite Element Analysis) and CFD (Computational Fluid Dynamics). Beginning to end, the most current Product Life-Cycle Management (PLM) software is used.

Advantages Include:

- Optimized ball/seat sealing engagement
- Line of sight bore for totally unobstructed media flow
- Optimized ball/stem tang interface
- Thermally stabilized seat geometry allows for rapid sealing

Superior valve coatings

Not all HVOF coatings are equal.

- Accuseal®'s HVOF coating formulas are the most consistent and least porous available, matched to the ball/seat material. State of the art technology applies the coating at the highest velocity for greatest density coverage, superior bond strength and surface hardness. Ongoing research ensures the most reliable coating is matched to service conditions.
- Accuseal®'s Fused carbide coating are thermally stablized to handle high cycle and high thermal cycle applications.
    - Superior coating performance under thermal stress and media bombardment.
    - Longer valve life with smooth surface integrity.
    - No place for leak paths to develop.
    - Reduced torque values to operate the valve

Omni-Lap 360°™

Proprietary mate-lapping produces the tightest, most reliable seal available. All metal seated ball valves rely on continuous, unbroken contact between the metal ball and seat to create an isolating seal. Omni-Lap 360°™ mate-laps the entire ball and seat for optimal roundness, producing 100% ball to seat contact, regardless of positioning.

Traditional cup-lapping methods mate only the sealing band of the ball to seat surfaces creating ridges that distort the ball's roundness and compromise the coating thickness. The sealing "sweet spot" originates a leak path if even slightly misaligned resulting in reduced valve life, more maintenance and higher actuation costs.

Omni-Lap 360°™ 100% contact Seals in any position

Omni-Lap 360°™	Traditional Lapping
• Automated lapping of the entire spherical surface • Consistent 100% roundness • Uniform coating thickness • Seals in any position • 100% ball to seat contact • Smooth surfaces reduce friction for lower torques	• Laps only a sealing band • Distorts roundness • Compromises coating thickness • Creates ridges around "sweet spot" • Surface irregularities cause higher torques

Traditional mate-lapping selectively laps the seat to only one side of the ball, resulting in imperfect spherical geometry and non-uniform coating thickness.

Vacuum seal testing

Accuseal® Valves vacuum testing of every ball and seat prior to assembly verifies 100% ball-to-seat seal to Class VI shut-off.

- Seal reliability is ensured
- Greater manufacturing efficiency means lower cost
- Easier valve assembly — in the factory and in the field

Plant Applications

Typical Combined Cycle

A. Feedwater System

- Deaerator Vent
- Isolation valves on Bypass Lines
- Extraction Steam Drain

B. HRSG

- Boiler Feed Pump Isolation
- Boiler Feed Pump Shell Drain
- Control Valve Isolation
- Boiler Feed Pump Warm-Up Line Drain
- Reheat / Superheat Spray Isolation
- Drum Blowdown Root Valve / Isolation Vents
- Drum Instrument Isolation
- Automatic Relief Valve
- Sight-Glass Block / Drain
- Tandem Blowdown
- Boiler Blowdown
- Primary Superheat Drain / Vent / Instrument Isolation
- Secondary Superheat Drain / Vent / Instrument Isolation
- Reheat Drain / Vent / Instrument Isolation
- Superheat Spray Block
- Reheat Spray Isolation Blocking
- LP Section HRSG Tube Drains
- IP Section HRSG Tube Drains
- HP Section HRSG Tube Drains
- Automated Bottom Blowdown

C. HP Turbine Steam Supply & Extraction Systems

- Main Steam Drain
- Main Steam Before and After Seat Drain
- Main Steam Land Drain
- Turbine Bypass Isolation
- Bypass Valves

D. IP & LP Turbine Steam Supply & Extraction Systems

- Supply Extraction Systems
- Hot Reheat Drain
- Hot Reheat at the CRV Drain
- IP and LP Turbine Extraction Drain

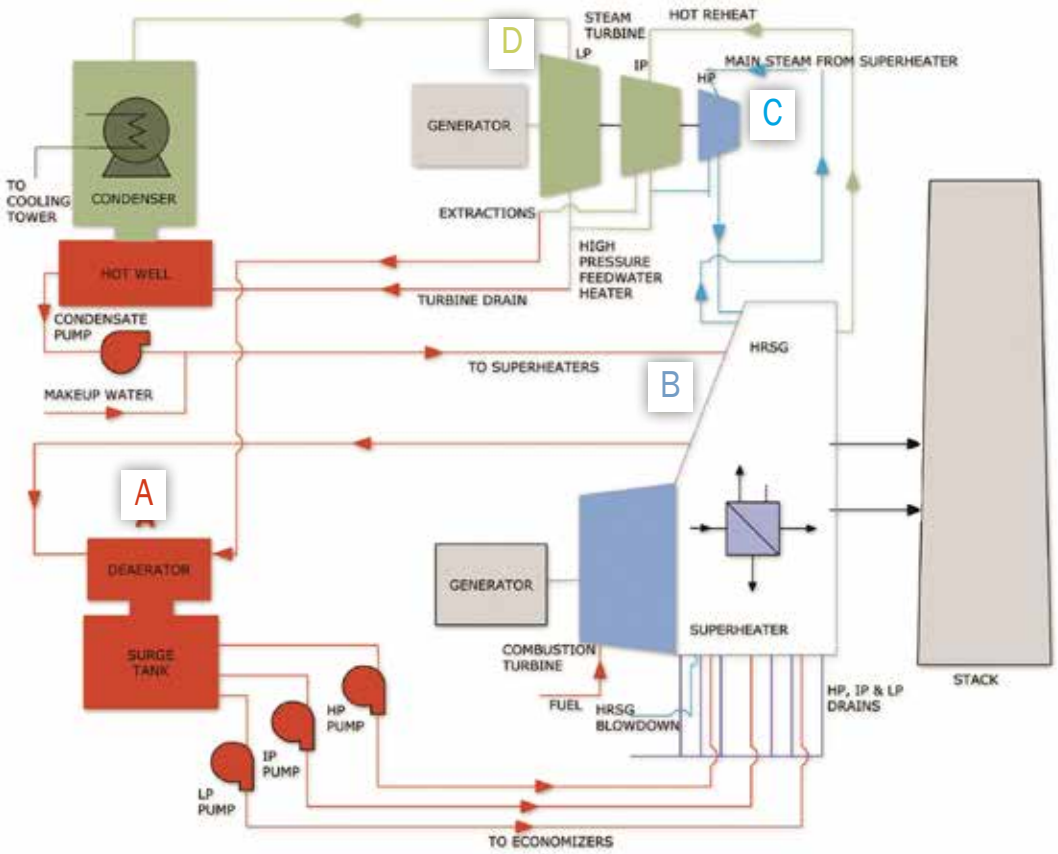

Typical Fossil Fueled

A. Condensate System
- Deaerator Vent
- Isolation Valves on Bypass lines
- Extraction Steam Drain
- Feedwater Heater Drain / Vent
- Shell Side Instrument Isolation

B. HP Feedwater
- Boiler Feed Pump Discharge Isolation
- Boiler Feed Pump Shell or Case Drain
- Boiler Feed Pump Minimum Flow Isolation
- Boiler Feed Pump Warming Line Isolation / Drain
- Reheat / Superheat Spray Isolation
- Feedwater Heater Isolation
- Bypass Valves
- Economizer Drain

C. Boiler System
- Drum Blowdown Root Valve
- Drum Instrument Isolation
- Sight-Glass Isolation
- Water Wall Drain / Vent
- Tandem Blowdown
- Mass Boiler Blowdown
- Primary Superheat Drain / Vent
- Secondary Superheat Drain / Vent
- Reheat Drain / Vent
- Superheat Spray Isolation
- Superheater Spray Automated Block
- Reheater Spray Isolation

D. HP Turbine Steam Supply and Extraction Systems
- Supply and Extraction Systems
- Main Steam Drain
- Main Steam Before and After Seat Drain
- Main Steam Lead Drain
- Turbine Bypass Isolation
- Bypass Valves

E. IP and LP Turbine Steam Supply and Extraction Systems
- Supply Extraction Systems
- Hot Reheat Drain
- IP and LP Turbine Extraction Drain

Auxiliary Systems
- Sootblower Piping System
- Sootblowing Header Isolation
- Sootblower Regulator Isolation
- Sootblower Control Valve Block
- Sootblower System Crossover Header Isolation
- Sootblower Bank Isolation
- Individual Sootblower Isolation
- Air Heater Sootblower Steam Supply Line Shutoff
- Sootblower Thermal Drains / Bypass
- HP and LP Steam Supply System to the BFP Turbine
- Main Steam Supply Isolation Valve
- HP BFP Steam Supply Drain
- HP BFP Below and Above Seat Drain
- Bypass Lines
- Extraction Steam Supply to LP BFP Turbine Drains
- LP BFP Below and Above Seat Drain
- Inerting Steam System
- Inert Steam Inlet to Pulverizer Blocking / Automated Isolation
- Steam Supply to Inerting System Pressure Regulator Isolation
- Extraction Steam Supply line to the Inerting Steam Header Drain
- Isolation Valves on the Bypass Lines
- Inserting System Steam Header Thermal Drain

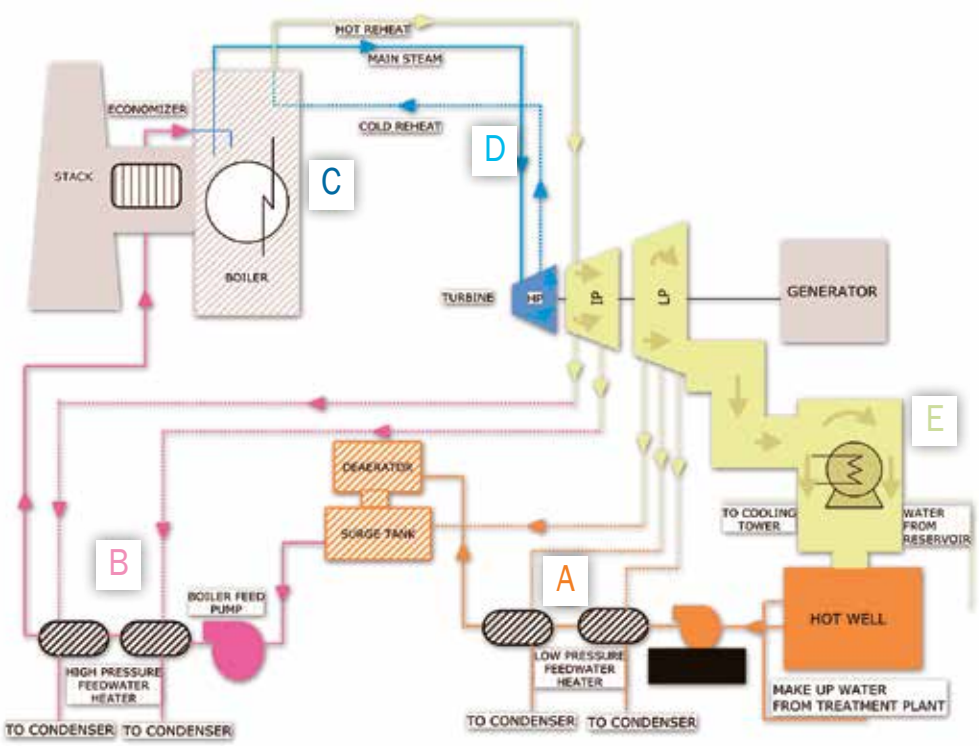

Accuseal® Features & Benefits

1. **Body** – one-piece machined forged bar stock
   - Mechanical and chemical integrity ensured — NO body leaks
   - Extended uni-body design protects seat during Post Weld Heat Treat (PWHT)
2. **Ball** – Omni-Lap 360°™ provides perfect roundness and eliminates high stress areas due to lapped ridge.
3. **Seat**
   - Thermally stabilized and optimized seat geometry maintains maximum seal, even during thermal transience.
4. **Wave Spring**
   - Superior performance to Belleville springs
   - More predictable force on ball to seat seal—even at low pressure
   - Longer spring life means longer valve life
5. **Stem** – One piece with surface hardening
   - Eliminates galling potential between rotating parts
   - Stem standard ASME keyed for reliable adaption
6. **Dual Inconel 718 Pins**
   - Oversized pins contained in thrust collars
   - Blow-out proof stem to ASME B16.34
7. **Mounting Flange**
   - Precision machined to ISO 5211
   - External mounting flange provides rigid mounting for ease of actuation
   - Direct mounting option reduces hysteresis and stem deflection
8. **Lockout Standard**
   - Fulfills Open/Closed lockout requirements
9. **Articulating Gland Flange**
   - Spherically engages with packing follower
   - Prevents stem binding and galling during adjustments
10. **Live Loaded Packing**
    - Standard with Belleville spring washers
    - Eliminates routine gland adjustments
    - Reduces maintenance
    - Guarantees zero stem emissions
11. **Open/Closed Indicator**
    - Scribed lines on stem and articulating gland flange
    - Ensures proper ball to seat alignment
    - Positive Open/Closed indicator

Field Repair Kit

BALL AND SEAT

- Inconel 718 ball and seat
- Fused Carbide coating - thermally stabilized
- Omni-Lap 360°™

Computer optimized sealing geometry.
All field repair kits are vacuumed tested to ensure Class VI shut-off.

WAVE SPRING

- Superior performance to Belleville springs
- More predictable force on ball to seat seal — even at low pressure
- Longer spring life means longer valve life

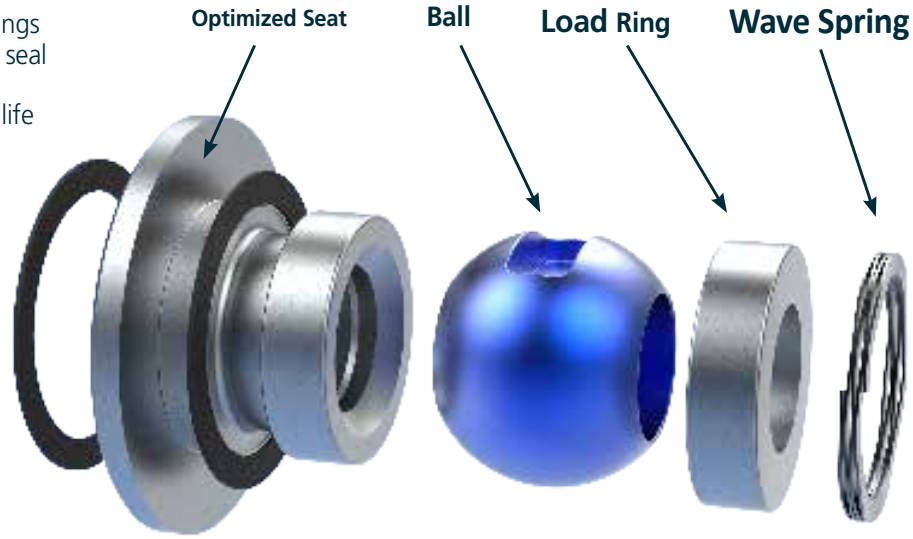

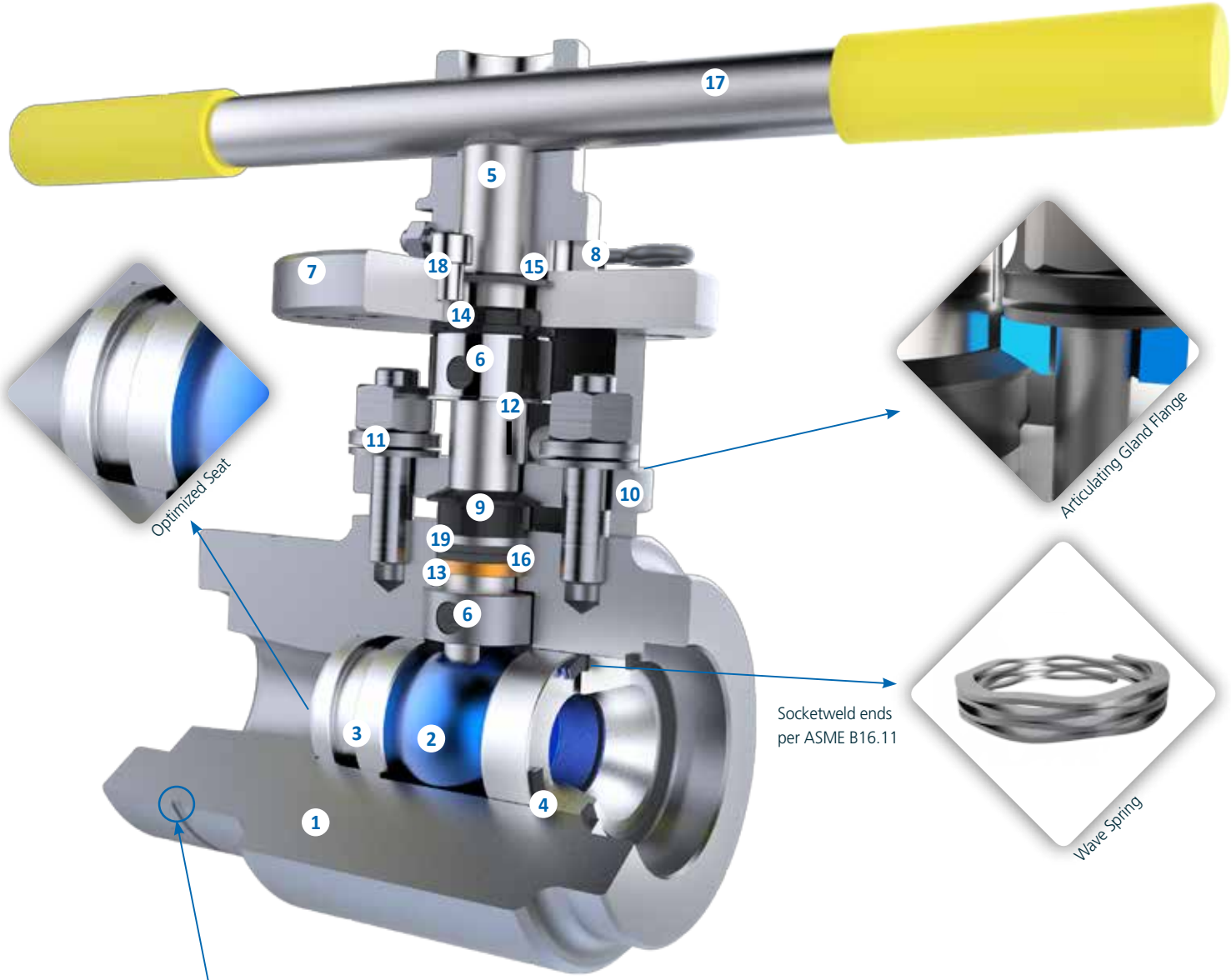

1 ring= F22 2 rings = A105 3 rings = F91

PWHT guide line per ASME B31.1 (see IOM for details)

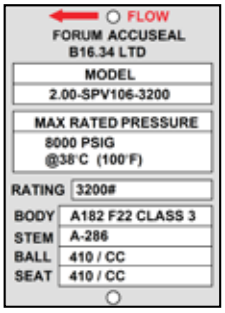

Nameplate

Accuseal® - Steam Power Valve (SPV)

Applications

- Boiler Drains and Vents
- Turbine Drains and Vents
- Control Valve Isolation
- Equipment Isolation
- Longer lasting alternative to gate and globe valves

Size

½" – 2½" (various bore sizes available)

ASME Pressure Class

600 - 4500 Limited Class

End Connections

- SW – ASME B16.11 (Standard)

Per customer specifications

Features and Benefits

- Omni-Lap 360° ™ optimized roundedness and matched ball and seats assemblies ensure 100% seal
- 410 HVOF trim for boiler drains and vents
- 718 Fused Carbide trim for HP drains, HRH drains, turbine drains and any high cycle or high thermal stress applications
- Withstands severe thermal shocks
- Tight shutoff to API 598/MSS SP-61
- Wave spring maximizes thermal cycling strength for longer life
- ISO 5211 Mounting Patterns

5 year warranty standard for all steam and feedwater services

Bill of Materials - Accuseal® SPV

ITEM	DESCRIPTION	MATERIAL
1	Body	A105 A182 F22 Cl.3 A182 F91
2	Ball	410 HVOF / CC Coating (Std. 600-3200 Cl.) Inconel 718 / Spray & Fuse (Std. 3200 – 4500 Cl.)
3	Seat	410 HVOF / CC Coating (Std. 600-3200 Cl.) Inconel 718 / Spray & Fuse (Std. 3200 – 4500 Cl.)
4	Wave Spring	A-286
5	Stem	Inconel 718 / A-286 Hardfaced
6	Packing Bushing	316 SS Hardfaced
7	Packing Rings	Grafoil
8	Anti-Extrusion Ring	Inconel Wire Reinforced Grafoil
9	Packing Follower	316 SS Hardfaced
10	Articulating Gland Flange	4130 Hardfaced
11	Live Loading Belleville Springs	Stainless Steel
12	Retaining Pins	Inconel 718
13	Guide Bearing	Ni-Al-Brz
14	Stem Retaining Ring	Stainless Steel
15	Mounting Flange	Carbon Steel
16	Transition Piece	410 SS
17	Load Ring/Retaining Ring	A-286

Special alloys and coatings available upon request CC = Chrome Carbide coating

ASME 600 - 1500 LTD

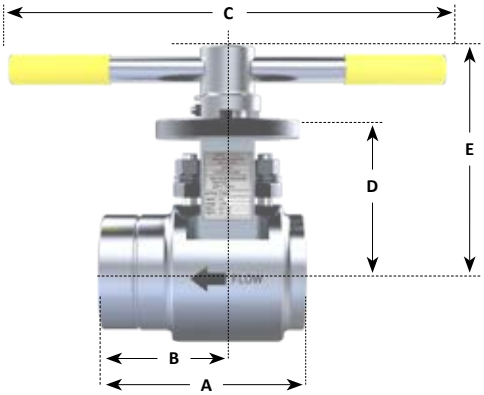

Cv – ASME 600, 900, 1500 Limited Class

Bore (inches)	Pipe Size (inches) / Schedule											
	0.50	0.50	0.75	0.75	1.00	1.00	1.50	1.50	2.00	2.00	2.50	2.50
	SCH 80	SCH 160	SCH 80	SCH 160	SCH 80	SCH 160	SCH 80	SCH 160	SCH 80	SCH 160	SCH 80	SCH 160
0.55	6	7	15	16	-	-	-	-	-	-	-	-
0.72	-	-	-	-	24	23	21	22	-	-	-	-
1.06	-	-	-	-	-	-	51	69	45	56	-	-
1.34	-	-	-	-	-	-	-	-	100	121	82	91
1.69	-	-	-	-	-	-	-	-	175	347	119	139

Dimension – ASME 600, 900, 1500 Limited Class

				A		B		C		D		E		Weight	
Model	Bore	Class	SW End	in	mm	in	mm	in	mm	in	mm	in	mm	lb	kg
Accuseal® SPV055	0.55	1500	0.50	7.51	190.75	4.00	101.60	15.00	381.00	4.45	113.03	7.15	181.61	19	8.61
	0.55	1500	0.75	6.00	152.40	4.00	101.60	15.00	381.00	4.45	113.03	7.15	181.61	19	8.61
	0.55	1500	1.00	6.00	152.40	4.00	101.60	15.00	381.00	4.45	113.03	7.15	181.61	20	9.07
Accuseal® SPV072	0.72	1500	1.00	6.00	152.40	3.63	92.08	15.00	381.00	4.45	113.03	7.15	181.61	19	8.61
	0.72	1500	1.50	6.00	152.40	3.63	92.08	15.00	381.00	4.45	113.03	7.15	181.61	20	9.07
Accuseal® SPV106	1.06	1500	1.50	7.25	184.15	4.63	117.48	18.00	457.20	5.24	133.10	7.94	201.68	31	14.06
	1.06	1500	2.00	7.25	184.15	4.63	117.48	18.00	457.20	5.24	133.10	7.94	201.68	34	15.42
Accuseal® SPV134	1.34	1500	2.00	8.25	209.55	5.13	130.18	18.00	457.20	5.63	143.00	8.73	221.74	45	20.41
	1.34	1500	2.50	8.25	209.55	5.13	130.18	18.00	457.20	5.63	143.00	8.73	221.74	47	21.31
Accuseal® SPV169	1.69	1500	2.00	11.50	292.10	6.25	158.75	N/A	N/A	7.08	179.80	N/A	N/A	70	31.80
	1.69	1500	2.50	9.50	241.30	6.25	158.75	N/A	N/A	7.08	179.80	N/A	N/A	70	31.80

Maximum Operating Pressure Rating vs. Temperature

	Temp (°F)	-20° to 100°	200°	300°	400°	500°	600°	650°	700°	750°	800°	850°	900°	950°	1000°	1050°	1100°
	Temp (°C)	-29° to 38°	93°	149°	204°	260°	316°	343°	371°	399°	427°	454°	482°	510°	538°	566°	593°
ASME 600 LTD	A 105 (1)	1500	1500	1480	1465	1465	1465	1430	1380	1270	1030	-	-	-	-	-	-
	A 182 Gr. F22 Cl.3 (2)	1500	1500	1480	1455	1450	1440	1430	1415	1415	1415	1355	1200	953	687	446	282
	A 182 Gr. F91	1500	1500	1500	1500	1500	1500	1500	1465	1460	1440	1355	1200	953	862	862	774
ASME 900 LTD	A 105 (1)	2250	2250	2220	2200	2200	2200	2145	2075	1905	1545	-	-	-	-	-	-
	A 182 Gr. F22 Cl.3 (2)	2250	2250	2220	2185	2175	2165	2145	2120	2120	2120	2030	1800	1433	1045	681	426
	A 182 Gr. F91	2250	2250	2250	2250	2250	2250	2250	2200	2185	2160	2030	1800	1433	1310	1310	1175
ASME 1500 LTD	A 105 (1)	2500	2500	2500	2500	2500	2500	2500	2500	2500	2500	-	-	-	-	-	-
	A 182 Gr. F22 Cl.3 (2)	2500	2500	2500	2500	2500	2500	2500	2500	2500	2500	2500	2500	2411	1784	1170	732
	A 182 Gr. F91	2500	2500	2500	2500	2500	2500	2500	2500	2500	2500	2500	2500	2411	2249	2249	2014

(1) Not recommended for prolonged use above 800°F / 427°C
(2) Not recommended for prolonged use above 1100°F / 593°C
Contact COOPER® Valves for pressure classes not listed.
NOTE: MAXIMUM differential pressure across valve = 2500 psig
Reduced ratings shown above are limited by material design considerations.
The valve body is designed in accordance with ASME B16.34 Limited Class pressure rating requirements for the designated pressure class.

ASME 3200 LTD

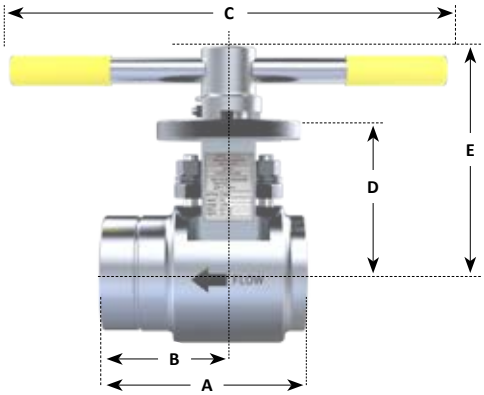

Cv – ASME 3200 Limited Class												
Bore (inches)	Pipe Size (inches) / Schedule											
	0.50	0.50	0.75	0.75	1.00	1.00	1.50	1.50	2.00	2.00	2.50	2.50
	SCH 160	SCH XXS	SCH 160	SCH XXS	SCH 160	SCH XXS	SCH 160	SCH XXS	SCH 160	SCH XXS	SCH 160	SCH XXS
0.55	7	1	16	6	-	-	-	-	-	-	-	-
0.72	-	-	-	-	23	10	26	34	-	-	-	-
1.06	-	-	-	-	-	-	69	56	59	66	-	-
1.34	-	-	-	-	-	-	-	-	144	103	90	95
1.69 (3)	-	-	-	-	-	-	-	-	347	271	139	255

Dimension – ASME 3200 Limited Class															
				A		B		C		D		E		Weight	
Model	Bore	Class	SW End	in	mm	in	mm	in	mm	in	mm	in	mm	lb	kg
Accuseal® SPV055	0.55	3200	0.50	7.51	190.75	4.00	101.60	15.00	381.00	4.45	113.03	7.15	181.61	19	8.61
	0.55	3200	0.75	6.00	152.40	4.00	101.60	15.00	381.00	4.45	113.03	7.15	181.61	19	8.61
	0.55	3200	1.00	6.00	152.40	4.00	101.60	15.00	381.00	4.45	113.03	7.15	181.61	20	9.07
Accuseal® SPV072	0.72	3200	1.00	6.00	152.40	3.62	91.95	15.00	381.00	4.54	115.32	7.24	183.90	21	9.52
	0.72	3200	1.50	6.00	152.40	3.62	91.95	15.00	381.00	4.54	115.32	7.24	183.90	24	10.88
Accuseal® SPV106	1.06	3200	1.50	7.25	184.15	4.63	117.48	18.00	457.20	5.27	133.86	8.27	210.06	36	16.32
	1.06	3200	2.00	7.25	184.15	4.63	117.48	18.00	457.20	5.27	133.86	8.27	210.06	40	18.14
Accuseal® SPV134	1.34	3200	2.00	8.25	209.55	5.13	130.18	18.00	457.20	6.25	158.75	9.25	234.95	56	25.40
	1.34	3200	2.50	8.25	209.55	5.13	130.18	18.00	457.20	6.25	158.75	9.25	234.95	61	27.66
Accuseal® SPV169	1.69	2500	2.00	11.75	298.45	6.00	152.40	N/A	N/A	8.00	203.2	N/A	N/A	100	45.50
	1.69	2500	2.50	9.50	241.30	6.00	152.40	N/A	N/A	8.00	203.2	N/A	N/A	99	45.0

Maximum Operating Pressure Rating vs. Temperature																	
	Temp (°F)	-20° to 100°	200°	300°	400°	500°	600°	650°	700°	750°	800°	850°	900°	950°	1000°	1050°	1100°
	Temp (°C)	-29° to 38°	93°	149°	204°	260°	316°	343°	371°	399°	427°	454°	482°	510°	538°	566°	593°
ASME 3200 LTD	A 105 (1)	4500	4500	4500	4500	4500	4500	4500	4500	4500	4500	-	-	-	-	-	-
	A 182 Gr. F11 Cl.2 (2)	4500	4500	4500	4500	4500	4500	4500	4500	4500	4500	4500	4500	4456	3337	2225	1483
	A 182 Gr. F22 Cl.3 (2)	4500	4500	4500	4500	4500	4500	4500	4500	4500	4500	4500	4500	4500	4131	2703	1693
	A 182 Gr. F91	4500	4500	4500	4500	4500	4500	4500	4500	4500	4500	4500	4500	4500	4500	4500	4500

(1) Not recommended for prolonged use above 800°F / 427°C
(2) Not recommended for prolonged use above 1100°F / 593°C
(3) 1.69 SPV is rated at 2500 LTD Class, not 3200 LTD Class.

NOTE: MAXIMUM differential pressure across valve = 4500 psig

Reduced ratings shown above are limited by material design considerations.
The valve body is designed in accordance with ASME B16.34 Limited Class pressure rating requirements for the designated pressure class.

ASME 4500 LTD

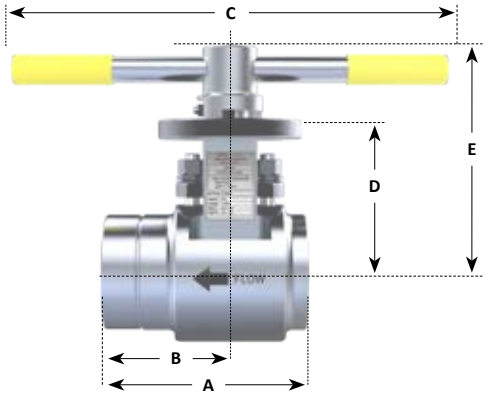

Cv – ASME 4500 Limited Class												
Bore (inches)	Pipe Size (inches) / Schedule											
	0.50	0.50	0.75	0.75	1.00	1.00	1.50	1.50	2.00	2.00	2.50	2.50
	SCH 160	SCH XXS	SCH 160	SCH XXS	SCH 160	SCH XXS	SCH 160	SCH XXS	SCH 160	SCH XXS	SCH 160	SCH XXS
0.66	-	-	12	5	21	14	21	21	15	16	-	-
1.00	-	-	-	-	-	-	49	50	48	54	44	48

Dimension – ASME 4500 Limited Class																
				A		B		C		D		E		Weight	
Model	Bore	Class	SW End	in	mm	in	mm	in	mm	in	mm	in	mm	lb	kg
Accuseal® SPV066	0.66	4500	0.75	8.50	215.90	4.75	120.65	18.00	457.20	5.09	129.29	7.79	197.87	31	14.06
	0.66	4500	1.00	7.25	184.15	4.75	120.65	18.00	457.20	5.09	129.29	7.79	197.87	30	13.60
	0.66	4500	1.50	7.25	184.15	4.75	120.65	18.00	457.20	5.09	129.29	7.79	197.87	35	15.87
	0.66	4500	2.00	8.00	203.20	4.75	120.65	18.00	457.20	5.09	129.29	7.79	197.87	41	18.64
Accuseal® SPV100	1.00	4500	1.50	8.25	209.55	5.38	136.53	18.00	457.20	6.25	158.75	9.35	237.49	54	24.49
	1.00	4500	2.00	8.25	209.55	5.38	136.53	18.00	457.20	6.25	158.75	9.35	237.49	60	27.21
	1.00	4500	2.50	8.25	209.55	5.38	136.53	18.00	457.20	6.25	158.75	9.35	237.49	63	28.57

Maximum Operating Pressure Rating vs. Temperature																	
	Temp (°F)	-20° to 100°	200°	300°	400°	500°	600°	650°	700°	750°	800°	850°	900°	950°	1000°	1050°	1100°
	Temp (°C)	-29° to 38°	93°	149°	204°	260°	316°	343°	371°	399°	427°	454°	482°	510°	538°	566°	593°
ASME 4500 LTD	A 105 (1)	6000	6000	6000	6000	6000	6000	6000	6000	6000	6000	-	-	-	-	-	-
	A 182 Gr. F11 Cl.2 (2)	6000	6000	6000	6000	6000	6000	6000	6000	6000	6000	6000	6000	6000	5017	3345	2230
	A 182 Gr. F22 Cl.3 (2)	6000	6000	6000	6000	6000	6000	6000	6000	6000	6000	6000	6000	6000	6000	4063	2546
	A 182 Gr. F91	6000	6000	6000	6000	6000	6000	6000	6000	6000	6000	6000	6000	6000	6000	6000	6000

(1) Not recommended for prolonged use above 800°F / 427°C
(2) Not recommended for prolonged use above 1100°F / 593°C

NOTE: MAXIMUM differential pressure across valve = 6000 psig
Reduced ratings shown above are limited by material design considerations.
The valve body is designed in accordance with ASME B16.34 Limited Class pressure rating requirements for the designated pressure class.


High Pressure Drum Valve


Main Steam Drain Valve


Instrument Sensor Isolation Valve


Water Wall Drain Valve

Accuseal® CR2

Applications

- Boiler Drains and Vents
- Turbine Drains and Vents
- Control Valve Isolation
- Equipment Isolation
- Longer lasting alternative to gate and globe valves

Sizes

1" - 8" (various bore sizes available)

Pressure Class

600 - 4500 Limited Class

Socket weld, Buttweld and Hub Connections

Complies with the ASME Section VIII Div. 1, 2 and 3 Boiler and Pressure Vessel codes. ASME Certificates of Authorization for ASME Section VIII Div. 1 ("U"), 2 ("U2") and 3 ("U3") are currently maintained.

5 year warranty standard

Bill of Materials - Accuseal® CR2

ITEM	DESCRIPTION	MATERIAL
1	Body	A105 A182 F22 Cl.3 A182 F91
2	End Connect	A105 A182 F22 Cl.3 A182 F91
3	Ball	Inconel 718 / Spray & Fuse
4	Seat	Inconel 718 / Spray & Fuse
5	Wave Spring	A-286
6	Stem	Inconel 718 / A-286 Hardfaced
7	Packing Bushing	316 SS Hardfaced
8	Packing Rings	Grafoil
9	Anti-Extrusion Ring	Inconel Wire Reinforced Grafoil
10	Packing Follower	316 SS Hardfaced
11	Articulating Gland Flange	4130 Hardfaced
12	Live Loading Belleville Springs	Stainless Steel
13	Retaining Pins	Inconel 718
14	Guide Bearing	Ni-Al-Brz
15	Stem Retaining Ring	Stainless Steel
16	Mounting Flange	Carbon Steel
17	Gasket	Graphite
18	Retaining Sleeve	304 SS

Features and Benefits

- Provides reduced total cost of ownership for operator
- Hub eliminates welding and PWHT requirements after installation
- Designed for extended lifespan with easy disassembly, maintenance, and complete repairability in the field
- Omni-Lap 360° TM optimized roundness and matched ball and seat assemblies ensure 100% seal
- TSO (Tight shut-off) to API 598/MSS SP-61
- Withstands severe thermal shocks

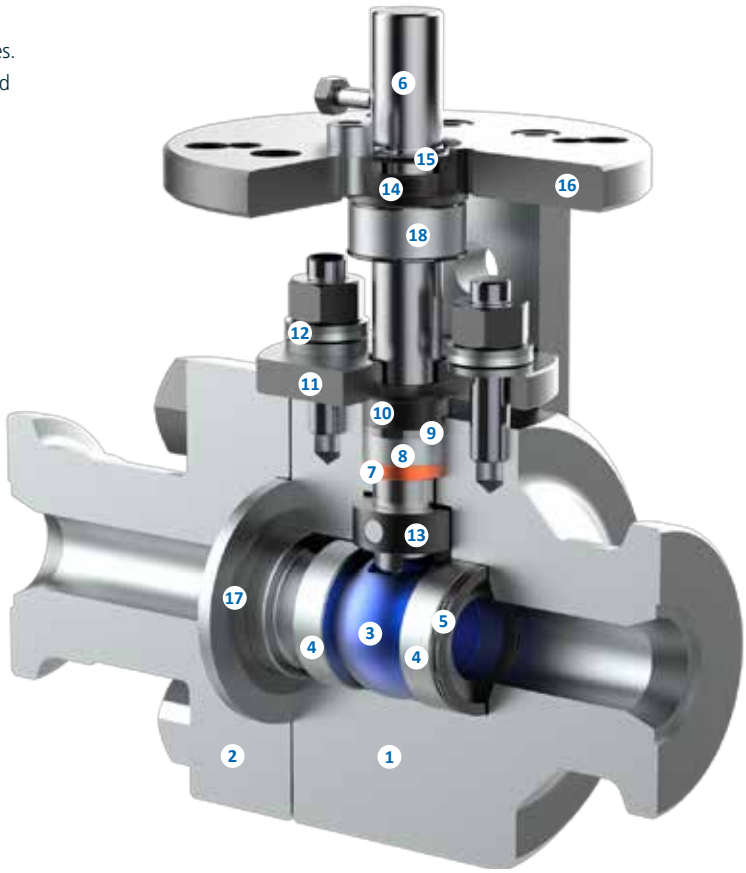

Bidirectional designs available.
Special alloys and coatings available upon request.

The Accuseal® Hub-End CR2 allows repair or replacement with no welding or hot work permit. A field repair kit and 2 new hub gaskets are all that is required.

Accuseal® CR2

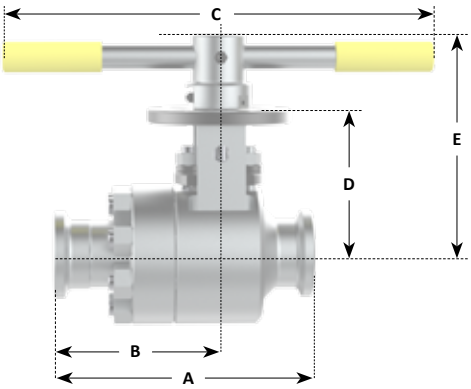

Cv – ASME 600, 900, 1500 Limited Class

Bore (inches)	0.75	0.75	1.00	1.00	1.50	1.50	2.00	2.00	2.50	2.50
	SCH 80	SCH 160	SCH 80	SCH 160	SCH 80	SCH 160	SCH 80	SCH 160	SCH 80	SCH 160
0.72	47	40	24	23	21	22				
1.06			104	73	51	69	45	56		
1.34					137	212	100	121	82	91
1.69							175	347	119	139

Dimension – ASME 1500, 3100, 4500 Limited Class

			A		B		C		D		E		Weight	
Model	Bore	Class	in	mm	in	mm	in	mm	in	mm	in	mm	lb	kg
Accuseal® CR2072	0.72	1500	8.50	215.90	5.52	140.21	15.00	381.00	4.54	115.31	7.24	183.89	26	11.79
	0.72	3100	9.50	241.30	6.15	156.21	15.00	381.00	5.13	130.30	7.83	198.88	32	14.51
Accuseal® CR2106	1.06	1500	9.00	228.60	5.71	145.03	18.00	457.20	5.56	141.22	8.56	217.42	42	19.05
	1.06	3100	11.00	279.40	6.99	177.54	18.00	457.20	5.86	148.84	8.56	217.42	62	28.12
Accuseal® CR2134	1.34	1500	10.50	266.70	6.81	172.97	18.00	457.20	6.25	158.75	9.25	234.95	66	29.93
	1.34	3100	12.50	317.50	7.66	194.56	18.00	457.20	6.82	173.99	9.82	249.42	92	41.73
Accuseal® CR2169	1.69	1500	11.75	298.45	7.22	183.38	-	-	7.73	196.34	-	-	107	48.53
	1.69	3100	14.00	355.60	8.70	220.98	-	-	8.40	213.36	-	-	147	66.67
Accuseal® CR2066	0.66	4500	11.75	298.45	7.68	195.07	18.00	457.20	5.46	138.68	8.16	207.26	61	27.66
Accuseal® CR2100	1.00	4500	13.75	349.25	8.81	223.77	18.00	457.20	6.93	176.02	9.93	252.22	115	52.16

Maximum Operating Pressure Rating vs. Temperature

	Temp (°F)	-20° to 100°	200°	300°	400°	500°	600°	650°	700°	750°	800°	850°	900°	950°	1000°	1050°	1100°
	Temp (°C)	-29° to 38°	93°	149°	204°	260°	316°	343°	371°	399°	427°	454°	482°	510°	538°	566°	593°
ASME 1500 LTD	A 105 (1)	2500	2500	2500	2500	2500	2500	2500	2500	2500	2500	-	-	-	-	-	-
	A 182 Gr. F22 Cl.3 (2)	2500	2500	2500	2500	2500	2500	2500	2500	2500	2500	2500	2500	2411	1784	1170	732
	A 182 Gr. F91	2500	2500	2500	2500	2500	2500	2500	2500	2500	2500	2500	2500	2411	2249	2249	2014
ASME 3100 LTD	A 105 (1)	4500	4500	4500	4500	4500	4500	4500	4500	4500	4500	-	-	-	-	-	-
	A 182 Gr. F22 Cl.3 (2)	4500	4500	4500	4500	4500	4500	4500	4500	4500	4500	4500	4500	4500	4131	2703	1693
	A 182 Gr. F91	4500	4500	4500	4500	4500	4500	4500	4500	4500	4500	4500	4500	4500	4500	4500	4495
ASME 4500 LTD	A 105 (1)	6000	6000	6000	6000	6000	6000	6000	6000	6000	6000	-	-	-	-	-	-
	A 182 Gr. F22 Cl.3 (2)	6000	6000	6000	6000	6000	6000	6000	6000	6000	6000	6000	6000	6000	6000	4063	2546
	A 182 Gr. F91	6000	6000	6000	6000	6000	6000	6000	6000	6000	6000	6000	6000	6000	6000	6000	6000

(1) Not recommended for prolonged use above 800°F / 427°C
(2) Not recommended for prolonged use above 1100°F / 593°C

NOTE: MAXIMUM differential pressure across valve = 6000 psig
Reduced ratings shown above are limited by material design considerations.
The valve body is designed in accordance with ASME B16.34 Limited Class pressure rating requirements for the designated pressure class.

Accuseal® Critical Service Ball Valve (CSV)

Applications

- Critical Isolation
- Custom designed to solve problem applications

Size

½″ – 30″ (larger sizes available)

ASME Pressure Class

150 - 4500 (standard, limited and special classes)

Sealing Options

- Uni-directional - Standard
- Bi-directional - Optional

End Connections

Per customer specifications

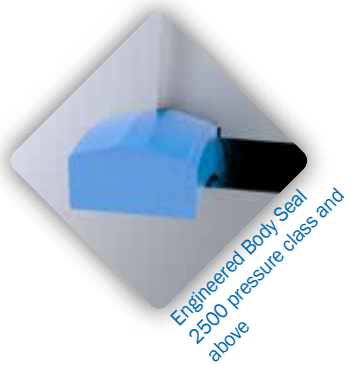

Features and Benefits

- Omni-Lap 360° ™ ball and seat
- Application specific coatings
- Coating matched to ball and seat materials to withstand thermal shocks
- Articulating gland flange prevents stem binding and galling during adjustments
- External and internal guide bearings insure proper alignment preventing lateral motion of the stem, even during side loading
- Replaceble ball and seats provide field repairability

1 year warranty on standard service (contact Accuseal® Valves for details)

Bill of Materials - Accuseal® CSV

ITEM	DESCRIPTION	MATERIAL
1	Body	A105 A182 F22 Cl.3 A182 F91
2	Ball	410 SS / CC Coating Inconel 718 / Spray & Fuse
3	Seats	410 SS / CC Coating Inconel 718 / Spray & Fuse
4	Belleville Spring	Inconel 718
5	Stem	A-286 Hardfaced
6	Inner Stem Seal	410 SS / CC Coating Hardfaced
7	Packing Bushing	316 SS Hardfaced
8	Packing Rings	Grafoil
9	Anti-Extrusion Ring	Inconel Wire Reinforced Grafoil
10	Packing Follower	316 SS Hardfaced
11	Articulating Gland Flange	410 SS Hardfaced
12	Live Loading Belleville Springs	Stainless Steel
13	Stem Retaining Ring	Stainless Steel
14	Mounting Flange	Carbon Steel
15	Body Gasket	Spiral Wound Grafoil Filled/ Inconnel 718 Gold Plated

Special alloys and coatings available upon request. CC = Chrome Carbide coating

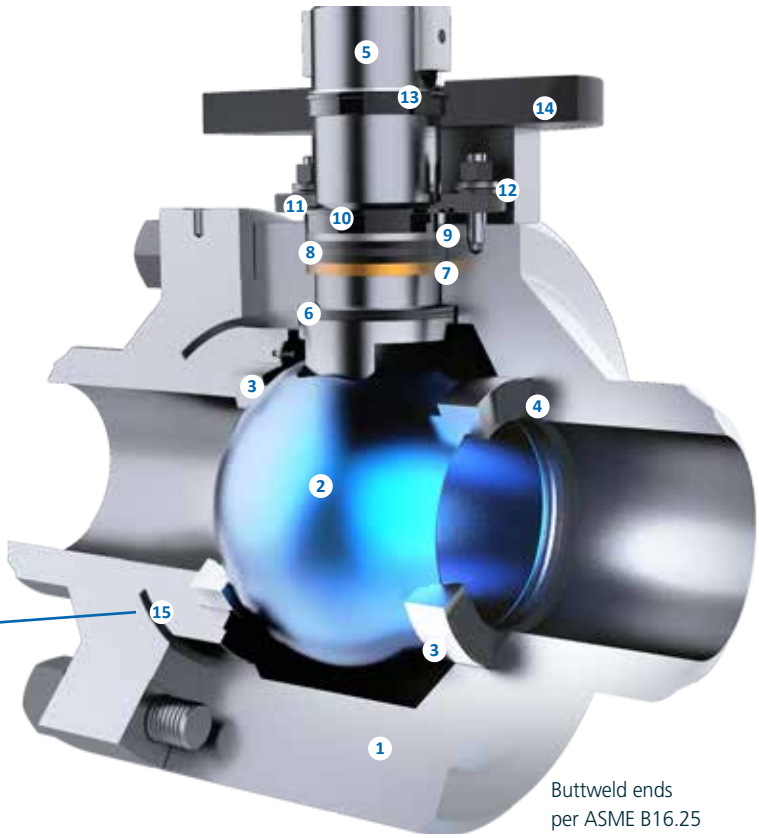

Buttweld ends per ASME B16.25

Body Gaskets

Spiral Wound Gaskets
- Grafoil filled
- 1500 pressure class and below

Engineered Body Seal
- 2500 pressure class and above
- Gold plated Inconel 718
- Pressure assisted seal

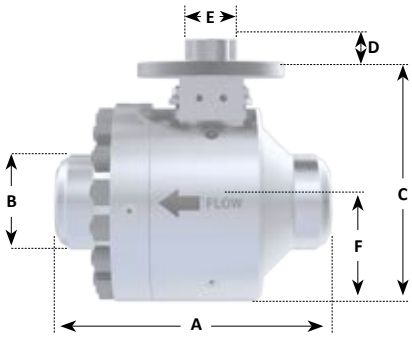

Accuseal® CSV – Bore

NPS (inches)	150	300	600	900	1500	2500	4500
0.5	0.55	0.55	0.55	0.55	0.55	0.55	Note 1
0.75	0.72	0.72	0.72	0.72	0.72	0.72	Note 1
1	1.06	1.06	1.06	1.06	1.06	1.06	Note 1
1.5	1.50	1.50	1.50	1.50	1.50	1.06	Note 1
2	2.00	2.00	2.00	2.00	2.00	1.50	Note 1
2.5	2.50	2.50	2.50	2.13	2.13	1.77	Note 1
3	3.00	3.00	3.00	3.00	2.62	2.30	Note 1
4	4.00	4.00	4.00	3.62	3.44	3.15	Note 1
6	6.00	6.00	6.00	5.50	5.19	4.90	Note 1
8	8.00	8.00	7.87	7.19	6.81	6.81	Note 1
10	10.00	10.00	9.75	9.06	8.50	8.50	Note 1
12	12.00	12.00	11.75	10.75	10.13	10.13	Note 1

Accuseal® CSV Cv – Full Bore

Valve Size (inches)	150	300	600	900	1500	2500	4500
0.5	25	22	21	18	18	16	Note 1
0.75	54	48	43	39	39	36	Note 1
1	144	126	110	102	102	92	Note 1
1.5	270	251	223	198	198	83	Note 1
2	549	498	429	382	382	163	Note 1
2.5	948	842	720	421	421	236	Note 1
3	1474	1250	1114	1076	682	438	Note 1
4	2932	2539	2134	1600	1283	919	Note 1
6	6393	6316	5366	4101	3281	2482	Note 1
8	12497	11931	9966	7468	6106	5508	Note 1
10	20612	19966	15889	12737	9933	8772	Note 1
12	30897	29974	24953	18475	14641	13051	Note 1

Accuseal® CSV 0.5" - 12" Dimensions

	Size (inches)	Bore	A	B	C	D	E	F
ASME150	0.5	0.55	4.25	0.90	4.17	1.10	0.50	1.88
	0.75	0.72	4.62	1.18	4.87	1.10	0.50	2.09
	1	1.06	5.00	1.50	5.24	1.31	0.75	2.44
	1.5	1.50	6.50	2.09	5.64	1.63	0.88	2.75
	2	2.00	7.00	2.57	5.87	1.31	0.75	3.00
	2.5	2.50	7.50	3.00	6.12	1.66	1.19	3.50
	3	3.00	8.00	3.63	5.56	1.18	0.88	3.75
	4	4.00	9.00	4.59	7.29	2.02	1.38	5.00
	6	6.00	15.50	6.73	9.92	2.59	2.25	7.00
	8	8.00	18.00	8.68	11.51	2.03	2.50	8.13
	10	10.00	21.00	10.75	13.86	2.68	2.75	10.50
	12	12.00	24.00	12.82	15.68	2.50	3.00	12.00
ASME 300	0.5	0.55	5.50	0.94	4.36	1.10	0.50	1.88
	0.75	0.72	6.00	1.22	4.87	1.10	0.50	2.09
	1	1.06	6.50	1.56	5.24	1.31	0.75	2.44
	1.5	1.50	7.50	1.94	5.98	1.63	0.88	2.75
	2	2.00	8.50	2.63	5.97	1.66	1.06	3.25
	2.5	2.50	9.50	3.06	6.12	1.66	1.19	3.50
	3	3.00	8.00	3.63	5.56	1.18	0.88	3.75
	4	4.00	9.00	4.59	7.29	2.02	1.38	5.00
	6	6.00	15.50	6.73	9.92	2.59	2.25	7.00
	8	8.00	18.00	8.68	11.51	2.03	2.50	8.13
	10	10.00	21.00	10.75	13.86	2.68	2.75	10.50
	12	12.00	24.00	12.82	15.68	2.50	3.00	12.00
ASME 600	0.5	0.55	6.50	0.94	4.36	1.10	0.50	1.88
	0.75	0.72	7.50	1.18	5.13	1.10	0.50	2.09
	1	1.06	8.50	1.56	5.24	1.31	0.75	2.44
	1.5	1.50	9.50	2.00	5.98	1.63	0.88	2.75
	2	2.00	11.50	2.56	6.25	1.66	1.06	3.25
	2.5	2.50	13.00	3.12	6.25	1.87	1.50	3.75
	3	3.00	14.00	3.69	7.31	1.27	1.38	4.13
	4	4.00	17.00	4.82	7.83	3.00	2.06	5.75
	6	6.00	22.00	7.06	10.66	2.38	2.50	7.25
	8	7.87	26.00	9.17	13.92	2.72	3.25	8.44
	10	9.75	31.00	11.31	17.32	4.50	4.00	11.63
	12	11.75	33.00	13.63	20.40	4.00	5.00	12.75

Accuseal® CSV 0.5" - 12" Dimensions

	Size (inches)	Bore	A	B	C	D	E	F
ASME 900	0.5	0.55	8.50	4.75	4.17	0.50	1.10	2.25
	0.75	0.72	9.00	5.12	4.89	0.50	1.10	2.25
	1	1.06	10.00	5.88	5.62	0.75	1.31	2.94
	1.5	1.50	12.00	7.00	7.22	1.06	1.66	3.50
	2	2.00	14.50	8.50	6.38	1.19	1.66	3.50
	2.5	2.13	16.50	9.63	6.53	1.50	1.87	3.75
	3	3.00	15.00	3.90	8.32	2.50	1.50	4.25
	4	3.62	18.00	4.64	10.46	3.00	2.06	5.75
	6	5.50	24.00	7.00	11.13	2.25	3.00	7.50
	8	7.19	29.00	8.97	12.96	2.94	3.63	9.25
	10	9.06	33.00	11.25	14.56	4.50	4.50	10.75
	12	10.75	38.00	13.29	16.44	4.50	5.50	12.00
ASME 1500	0.5	0.55	8.50	4.75	4.17	0.50	1.10	2.25
	0.75	0.72	9.00	5.12	4.89	0.50	1.10	2.25
	1	1.06	10.00	5.88	5.62	0.75	1.31	2.94
	1.5	1.50	12.00	7.00	7.22	1.06	1.66	3.50
	2	2.00	14.50	8.50	6.38	1.19	1.66	3.50
	2.5	2.13	16.50	9.63	6.53	1.50	1.87	3.75
	3	2.62	18.50	3.92	9.28	2.50	1.75	4.50
	4	3.44	21.50	5.00	9.10	2.84	2.50	6.12
	6	5.19	27.75	7.43	13.04	3.00	3.38	7.75
	8	6.81	32.75	9.69	16.49	5.00	4.00	9.50
	10	8.50	39.00	11.94	17.40	4.50	5.50	11.50
	12	10.13	44.50	14.19	18.20	4.50	6.75	13.25
ASME 2500	0.5	0.55	10.38	1.20	5.25	1.10	0.50	2.50
	0.75	0.72	10.75	1.60	6.13	1.31	0.69	2.75
	1	1.06	12.12	2.18	6.67	1.63	0.88	3.00
	1.5	1.06	15.12	2.80	6.67	1.66	1.19	3.00
	2	1.50	17.75	3.64	6.49	2.63	1.75	3.50
	2.5	1.77	20.00	3.33	9.24	2.82	1.63	4.25
	3	2.30	22.75	4.26	10.42	1.81	1.75	4.50
	4	3.15	26.50	5.79	11.44	2.84	2.50	6.50
	6	4.90	36.00	8.58	13.21	6.80	3.38	8.50
	8	6.81	40.25	11.89	16.80	5.00	5.25	9.75
	10	8.50	50.00	14.62	17.66	6.50	7.50	11.75
	12	10.13	56.00	17.47	18.88	6.50	8.00	13.50

1. ASME 4500 pressure class bore / Cv varies according to application (values determined based on customer needs). Contact Accuseal® Valves for sizes and pressure classes not listed.

Low Pressure - Steam Power (SP2) Valve

Application Specific Features

- **FULL BORE**
  Straight through, smooth full bore flow path allows for highest flowing capacity (Cv or Kv) with no flow interruptions.
- **AUTOMATED LAPPING**
  An automated mate-lapping system laps the ball and seat in unison, creating 100% matched sealing surfaces (a mirror-like finish) that equates to gas-tight sealing.
- **INTEGRAL SEAT DESIGN, 2-PIECE CONSTRUCTION**
  HVOF Chromium Carbide Coated Ball & Seat
- **ZERO LEAKAGE SEAT TIGHTNESS**
  All (100%) valves are tested to 'Zero Leakage' acceptance criteria API 598 with low pressure gas test.
- **MOUNTING FLANGE FOR AUTOMATION**
  Mounting Flange allows user to adapt many actuators with ease.
- **REPAIRABLE**
  Valve is repairable and can be supplied with spare parts kit.

Actuation and Controls

Accuseal Valves has access to all types of Actuation and Controls:

- Pneumatic and Hydraulic actuators
- Spring Fail and Double-Acting
- Electric actuators
- Volume boosters & tanks
- Solenoids, Filters, Positioners

IBR

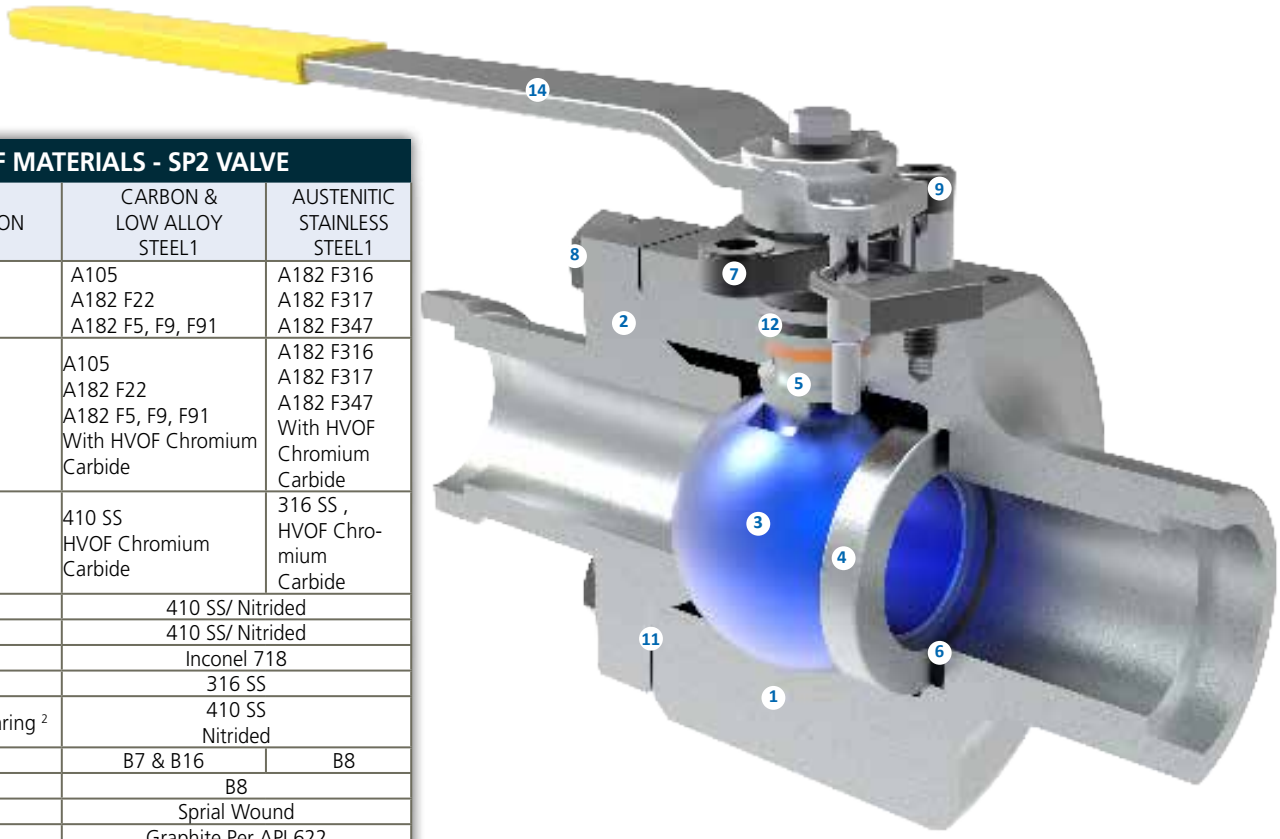

BILL OF MATERIALS - SP2 VALVE			
ITEM	DESCRIPTION	CARBON & LOW ALLOY STEEL1	AUSTENITIC STAINLESS STEEL1
1	Body	A105 A182 F22 A182 F5, F9, F91	A182 F316 A182 F317 A182 F347
2	End Connect	A105 A182 F22 A182 F5, F9, F91 With HVOF Chromium Carbide	A182 F316 A182 F317 A182 F347 With HVOF Chromium Carbide
3	Ball	410 SS HVOF Chromium Carbide	316 SS , HVOF Chromium Carbide
4	Seat	410 SS/ Nitrided	
5	Stem	410 SS/ Nitrided	
6	Spring [2]	Inconel 718	
7	Gland	316 SS	
8	Inner Stem Bearing [2]	410 SS Nitrided	
9	Body Bolting	B7 & B16	B8
10	Gland Bolting	B8	
11	Body Gasket [2]	Sprial Wound	
12	Packing	Graphite Per API 622	
13	Live Load Springs [2]	17-7 PH SS	
14	Lever	Steel with Handle Grip	

1 Please consult factory for materials not listed.
2 Not shown.

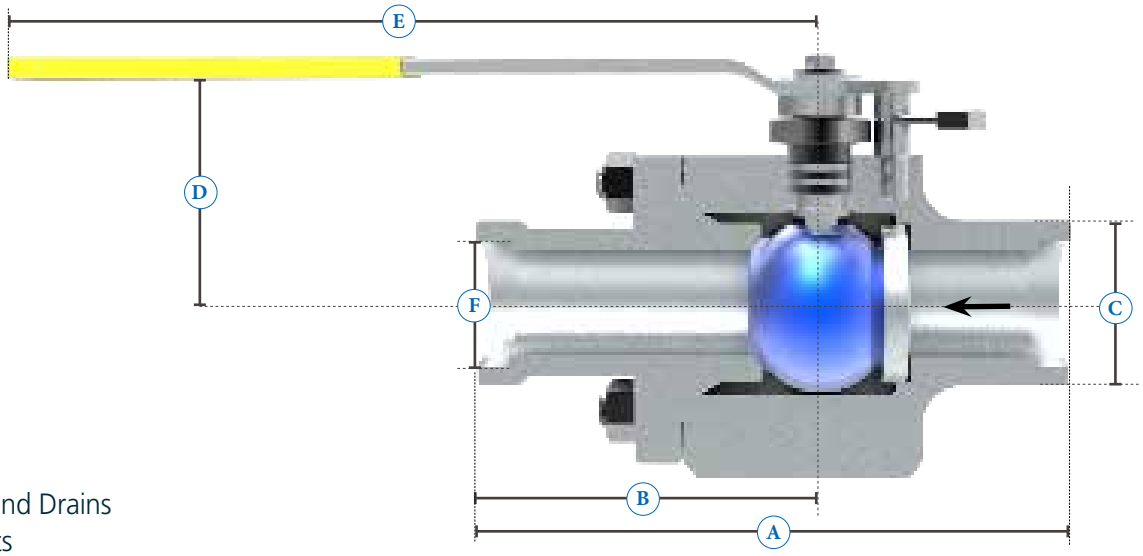

Industries Served

- **POWER**
  - Condensate Isolation
  - LP, IP, and CRH Vents and Drains
  - Heater drains and vents
  - Instrument Isolation
  - Tight Shutoff to API 598/MSS SP-61
- **REFINING**
  - Petrochemical
  - Chemical
  - Hydrocracking and Hydro-processing
- **MINING**
  - Vent and Drains
  - Water Service with Solids

DIMENSIONS in/mm

NPS (inches)	DN	A	B	C	D	E	F	WEIGHT lb / kg	C_V K_V
0.5	15	6.50 165.1	3.74 95.0	1.61 41.0	3.32 84.5	7.09 180.0	0.86 21.8	13 6	25 21.6
0.75	20	6.50 165.1	3.74 95.0	1.61 41.0	3.32 84.5	7.09 180.0	1.07 27.1	15.5 7	60.4 52.2
1	25	8.00 203.2	4.92 125.0	1.89 48.0	3.66 93.0	8.66 220.0	1.34 34.0	20 9	104 80.0
1.5	40	9.50 241.3	5.83 148.0	2.52 64.0	4.59 116.5	11.81 300.0	1.94 49.2	31 14	270 233.5
2	50	11.50 292.1	6.70 170.0	3.15 80.0	4.92 125.0	15.75 400	2.42 61.4	57 26	467 403.7

STEAM POWER VALVE, LOW PRESSURE – SP2

ITEM	TYPE	CHARACTERISTICS
1	Design	ASME B16.34
2	Temperature	-20 to 1,000°F (537°C)
3	ASME Class Ratings	150, 300, and 600
4	Size	1/2 to 2 (DN15 to DN50)
5	Material Type	Forgings
6	End Types	Buttwelding Ends Socketwelding Ends Threaded Ends Flanged Ends
7	Sealing	Uni - Directional
8	Testing	Zero Leakage API 598
9	Special	NACE MR0103 Non Destructive Examination (NDE) Positive Material Identification (PMI) Low-E Packing for Fugitive Emissions
10	Certifications	ISO 9001-2008 PED / CE, API 607 Canadian Registry Number (CRN) Indian Boiler Regulations (IBR)

Grayloc® Connectors

A Grayloc® Connector has three components:

Metal Seal Ring – The Grayloc® seal ring achieves a self-energized and pressureenergized bore seal that will hold vacuum or external pressures. The metal Grayloc® seal ring consists of a rib and two lips. During make-up, the seal ring lips deflect inward as the connector is assembled. This deflection is controlled and is within the elastic limits of the seal ring material.

Two Hubs – The clamp fits over the two hubs and forces them against the seal ring rib. As the hubs are drawn together by the clamp assembly, the seal ring lips deflect against the inner sealing surfaces of the hubs. This deflection elastically loads the lips of the seal ring against the inner sealing surface of the hub, forming a selfenergized seal.

Clamp Assembly – The clamp is the primary pressure-retaining member of the Grayloc® connector, not the bolting. The two-piece clamp configuration insures equal loading around the entire connector. The clamp carries all of the internal pressure loads as well as axial and bending loads transmitted by the pipe. No specific orientation is required when the clamps are installed around the hubs.

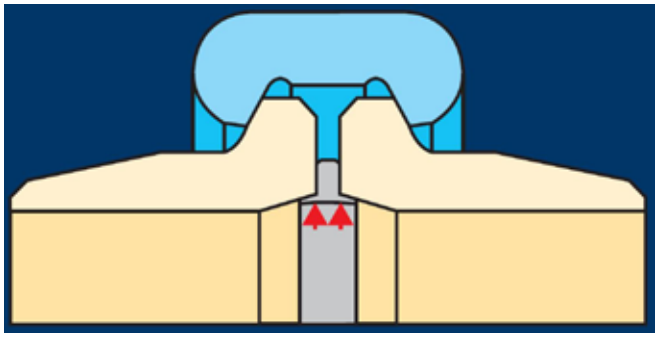

Service Extremes

Vibration, heat, cold and thermal shock often accompany service where Grayloc® connectors are heavily loaded. Grayloc® connectors consistently withstand severe situations without routine maintenance. Special designs permit maintenance-free service even under the extreme conditions shown at left.

Accuseal® Valves Quality

Accuseal® Valves manufactures to ASME B16.34

Certifications

ISO 9001: 2008

PED/CE

CRN

IBR

Actuation

- ISO 5211 mounting patterns
- Accuseal® Valves automates to customer specifications

COOPER® Product Warranty

Accuseal® SPV, CR2 – Steam Power Ball Valves

- Standard: 5 years
- High cycle: 1 year

Contact Accuseal® Valves for additional warranty information

Accuseal® CSV – Critical Service Ball Valves

- Standard: 1 year

Accuseal® SP2 –

- Standard: 1 year

Contact Accuseal® Valves for additional warranty information

Accuseal® Product Test Procedures

- Standard valve testing to meet or exceed MSS SP-61, FCI 70-2, and API 598
- Exclusive vacuum testing of ball and seat to verify seal prior to valve assembly

Our goal is to become the leading provider of mission critical oilfield products and related services in terms of customer satisfaction, safety and financial performance.

Our experienced management team and employees are dedicated to solving our customers' problems. We invest in long term relationships and cooperate on product development with our clients, we consider them our partners.

OUR CORE VALUES

Integrity: In everything we do, in every interaction, both internally and externally, we strive to operate with the upmost integrity and mutual respect.

Long-term view: We are building our company for the long-term, a company that we can be proud of.

Open communication: We believe partnerships with our customers and co-workers must be based on trust, professionalism and transparency.

Customer focused: Our products enhance our customer's performance and we listen to their needs and work with them to solve their challenges.

Good place to work: We are committed to creating a workplace that fosters innovation, teamwork and pride. Every team member is integral to our success and is treated equally and fairly.

No one gets hurt: The safety of our employees and customers is our first priority coupled with a healthy respect for the environment.

For more information about our products and full Terms & Conditions please visit www.f-e-t.com.

FORUM™
ENERGY TECHNOLOGIES

Forum Severe Service Valves LLC
4659 Wright Road
Stafford, Texas 77477
800.480.0832 [o] 281.573.0950 [f]
www.f-e-t.com
http://coopervalves.com/valves/type/ball