# Mid-West® Instrument

## Series 700 "Wet/Wet"

## Differential Pressure Transmitter

**Range 0-5 PSID (0- 0.35 Bar) thru 0-300 PSID (0-20 Bar)**

Mid-West Instrument wet/wet differential pressure transmitter utilizes a piezoresistive differential pressure sensor sensing element with stainless steel isolated diaphragm. Silicon oil is filled in between die and two diaphragms. The measured differential pressure is transmitted onto the die through the diaphragm and silicon oil. The signal output generated by the piezoresistive bridge sensor is amplified into a useable voltage or 4-20 mA output as specified by customer. 1 Year Limited Warranty. **(Standard Delivery 4 Weeks ARO.)**

**Product Features**

Use with Liquid or Gas media compatible with material of construction
Full stainless steel construction, compact size, easy installation
Laser welded, fully-sealed construction: NEMA 4X (IP65)
Utilizes Piezoresistive Differential Pressure Sensor Isolated Diaphragm
Zero and Span Adjustable
CE Certified to EMI / EMC Directive
LCD or LED display available upon request
**(Available with DIN Connector & 4-20mA Output Only, 2-Wire 20-28 VDC)**
Maximum Overpressure (+) Hi-Side equals 2 times specified DP range
Maximum Overpressure (-) Low-Side is equal to specified DP range
Maximum Static Pressure 2,900 PSI

It is recommended to install a 3 valve manifold between point of measurement and the transmitter.

**Materials of Construction**

- **Pressure Port & Housing:** 321 Stainless Steel
- **Diaphragm:** 316L Stainless Steel
- **O-ring:** Viton
- **Process Connections:** ¼" Female BSPP (STD)
- **Fill liquid:** Silicon Oil

**Available Electrical Specifications:**

- **Power Supply:** 2-Wire 15~28 VDC
  3-Wire 15~28 VDC, 2-Wire 20-28 VDC
- **Output Signals:** 2-Wire 4~20mADC,
  3-Wire, 0~5VDC, 1~5VDC, 0~5VDC
  0~10VDC, 0-10mADC and 0-20m ADC
- **Electrical Connections:**
  Din Plug 43650 or 1.5m 4-pin cable
- Response Time: (10%~90%) ≤1ms
- Insulation Resistance 100MΩ, 50VDC

LCD or LED
3-1/2 Digit Display

¼" BSPP x ¼" FNPT
¼" BSPP x ½" FNPT
**S.S. Adapters Available**

| Description | Range | % / Unit | |
|---|---|---|---|
| Accuracy (LIN, HYS, & REP.) | 5～300 PSID | 0.50% Full Scale | |
| Zero Thermal Drift | 0～15 PSID | ±.03% Full Scale / °C Typ. | |
| | 30～300 PSID | ±.02% Full Scale / °C Typ. | |
| FS Thermal Drift | 0～15 PSID | ±.03% Full Scale / °C Typ. | |
| | 30～300 PSID | ±.02% Full Scale / °C Typ. | |
| Stability | ≤ 30 PSI | 0.50% | %FS / Year |
| | ≤ 30 PSI | 0.20% | |
| Static Pressure Effect | ±0.05% | | FS, ea. 15 PSI |
| Compensation Temperature | 0~50 | | °C |
| Operating Temperature | -10~80 | | |
| Storage Temperature | -40~120 | | |

6500 Dobry Dr. • Sterling Heights, MI USA • Toll Free: 800-648-5778 • 586-254-6500 • Fax 586-254-6509
Web Site: www.midwestinstrument.com • Email Contact: sales@midwestinstrument.com

**Standard Model Specification: 700-22-005P-C4-B1-E**
321 Stainless Steel Pressure Port & Housing, 316 Stainless Steel Diaphragm
Viton O'Rings, ¼" Female BSPP Connections, DIN 43650/IP65 Plug-In Type Connector
Electrical Input & Output: 2-wire 15~28VDC / 4~20mADC
Accuracy ±0.5% Full Scale

**Mid-West Instrument**
**1-800-648-5778**

**Range: 0-5 PSID (0-0.35 Bar) to 0-300 PSID (0-20 Bar)**

| 1 | | | 2 | | 3 | | | | 4 | | 5 | | 6 |
|---|---|---|---|---|---|---|---|---|---|---|---|---|---|
| 7 | 0 | 0 | 2 | 2 | 0 | 0 | 5 | P | C | 4 | B | 1 | E |

Basic Model

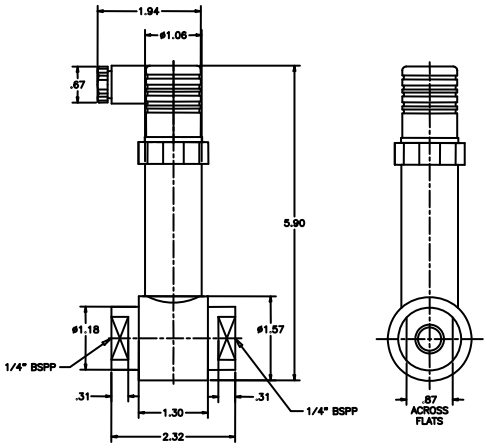

| 1 | Description |
|---|---|
| 700 | Differential Pressure Transmitter |
| 710 | Differential Pressure Transmitter W/LCD Readout<br>**(Available with DIN Connector & 4-20mA Output only)** |
| 715 | Differential Pressure Transmitter W/LED Readout<br>**(Available with DIN Connector & 4-20mA Output only)** |
| **2** | **Materials of Construction** |
| 22 | Pressure Port & Housing = 321 S.S. / Diaphragm = 316L S.S. |
| **3** | **Differential Pressure Range** |
| PSID=**P** | 5, 10, 15, 30, 50, 100, 150, & 300 PSID |
| Bar=**B** | .35, .70, 1, 2, 3.5, 7, 10, 20 |
| kPa=**K** | 35, 70, 100, 200, 350, 700 |
| **4** | **Process Connection** |
| C4 | 1/4" Female BSPP (STD) |
| **5** | **Electrical Connection** |
| B1 | DIN 43650/IP65 Plug-In Type |
| B2 | Cable Connection / Standard Length 1.5m |
| **6** | **Power Supply Input / Output Signal** |
| E | 2-wire 15~28VDC / 4~20mADC / LCD or LED Display 20-28VDC |
| F | 3-wire 15~28VDC / 1~5VDC |
| J | 3-wire 15~28VDC / 0~5VDC |
| Q | 3-wire 15~28VDC / 0~10mADC |
| U | 3-wire 15~28VDC / 0~20mADC |
| V | 3-wire 15~28VDC / 0~10VDC |
| | **316 S.S. Adapters (includes Viton O'ring)** |
| 113319 | 1/4" MALE BSPP to 1/4" FNPT 316 S.S. Adapter |
| 113320 | 1/4" MALE BSPP to 1/2" FNPT 316 S.S. Adapter |

6500 Dobry Dr. • Sterling Heights, 48314 MI USA • Ph# 586-254-6500 • 800-648-5778 Fax 586-254-6509
Web Site: www.midwestinstrument.com • Email: sales@midwestinstrument.com